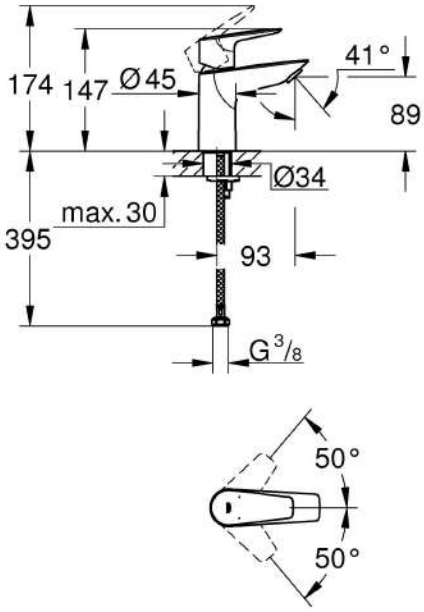
174
147
Ø45
41°
89
Ø34
max. 30
395
93
G 3/8
50°
50°

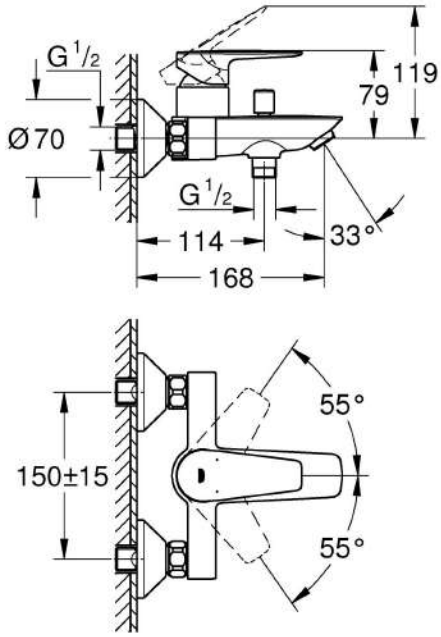
G 1/2
119
79
Ø70
G 1/2
114
33°
168
55°
150±15
55°

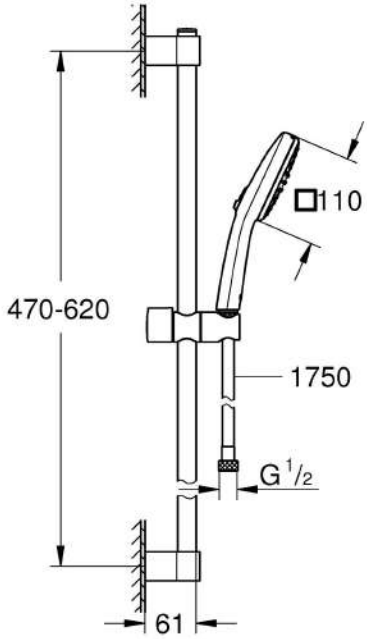
110
470-620
1750
G 1/2
61