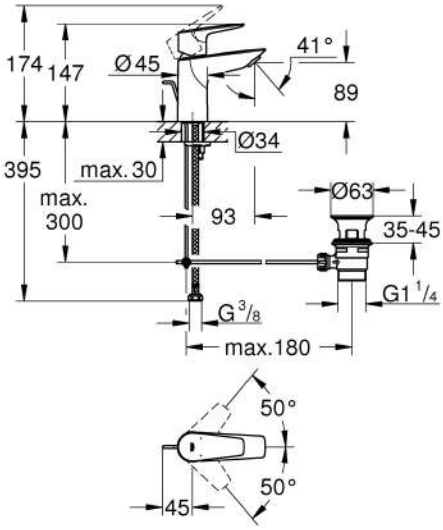
174
147
Ø45
41°
89
Ø34
395
max. 30
max.
300
93
Ø63
35-45
G1 1/4
G 3/8
max.180
50°
50°
45

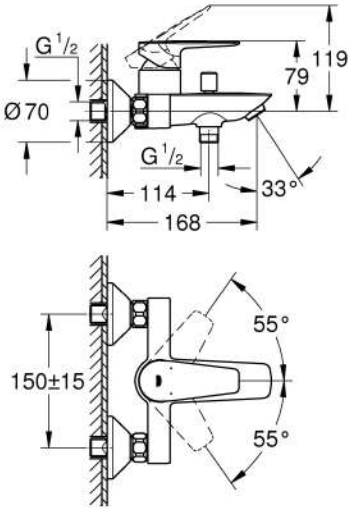
G 1/2
119
79
Ø70
G 1/2
114
33°
168
55°
150±15
55°

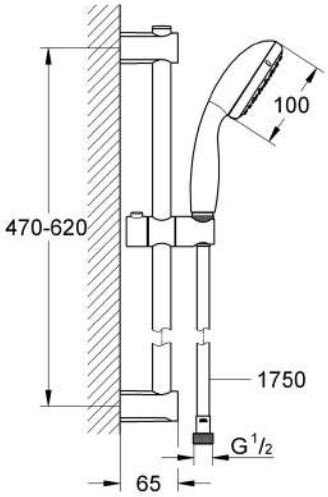
100
470-620
1750
G 1/2
65