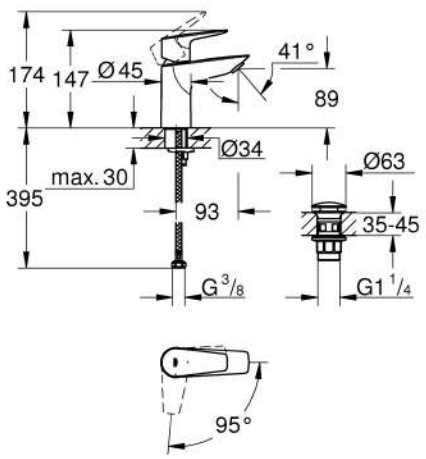
174
147
Ø45
41°
89
Ø34
max. 30
395
93
Ø63
35-45
G3/8
G1 1/4
95°

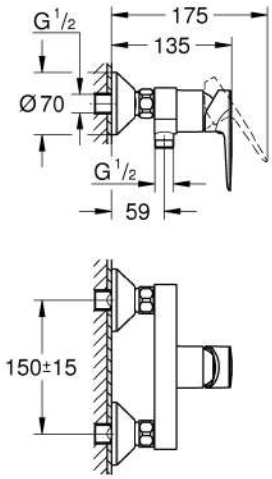
G1/2
175
135
Ø70
G1/2
59
150±15

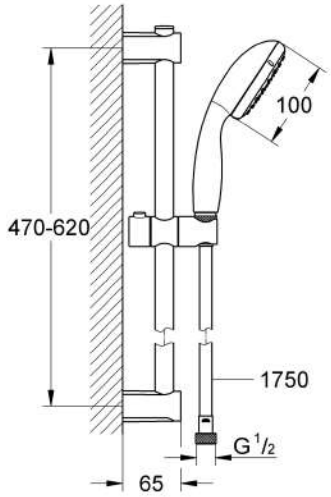
100
470-620
1750
G1/2
65