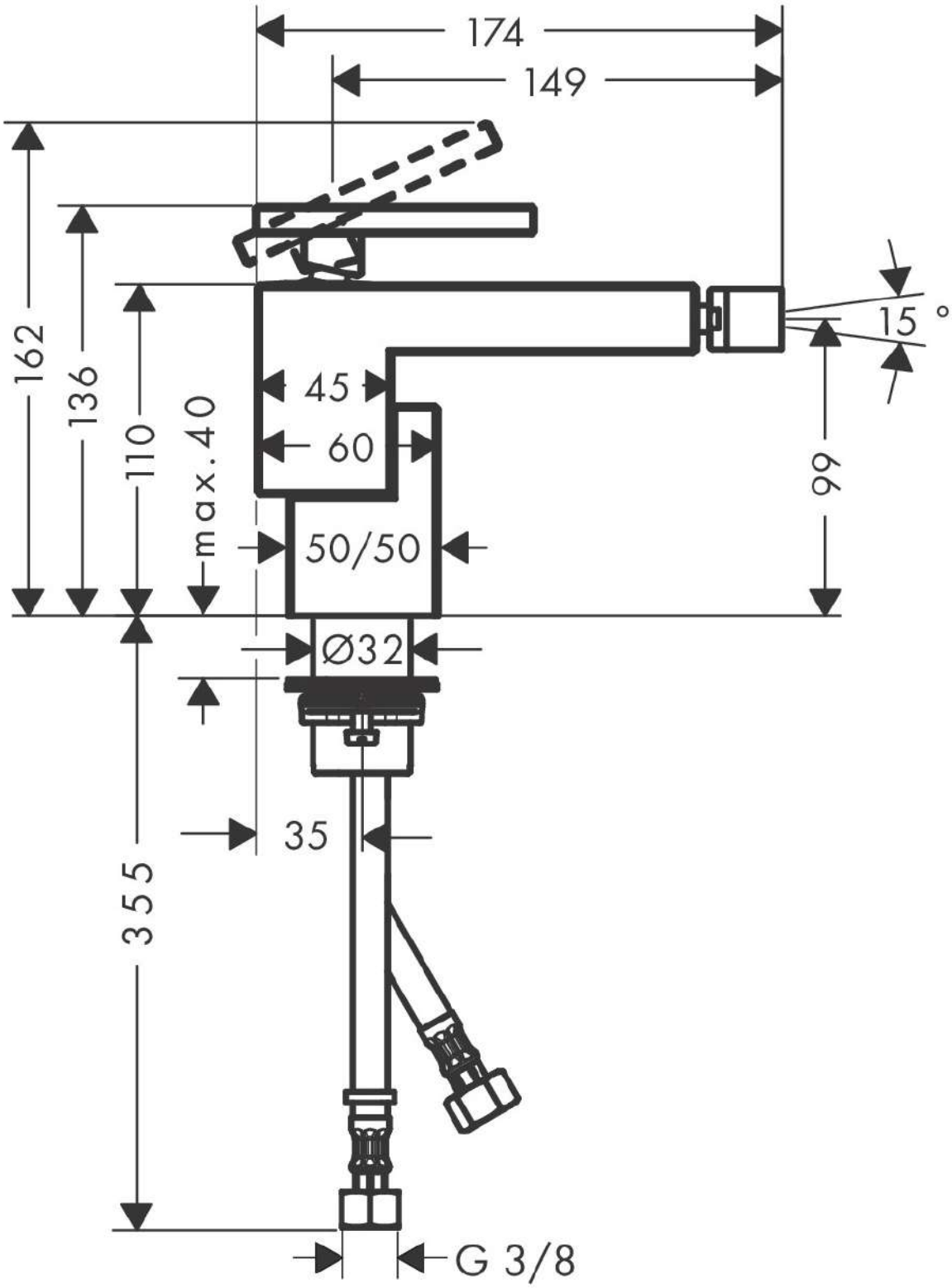
174
149
162
136
110
max. 40
45
60
50/50
15 °
99
Ø32
35
355
G 3/8