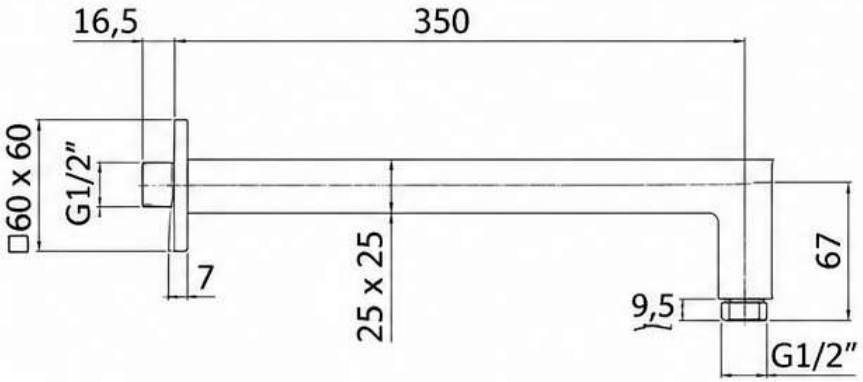
16,5
350
□60 x 60
G1/2"
7
25 x 25
67
9,5
G1/2"

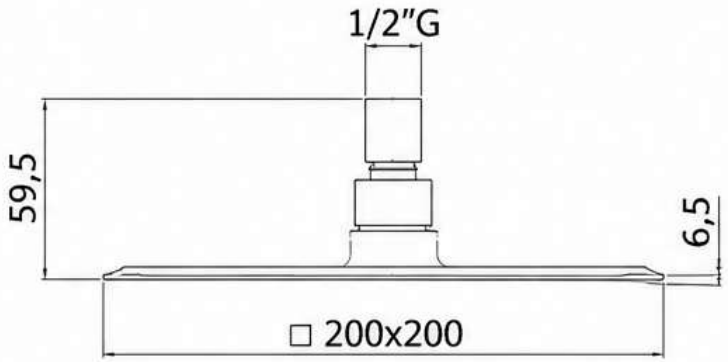
1/2"G
59,5
6,5
□ 200x200

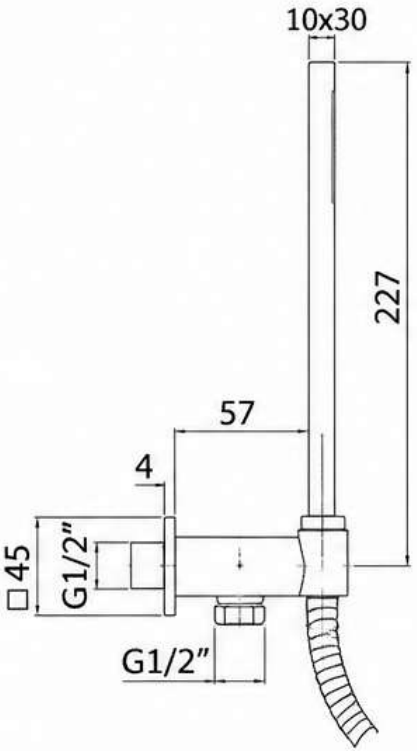
10x30
227
57
4
□45
G1/2"
G1/2"

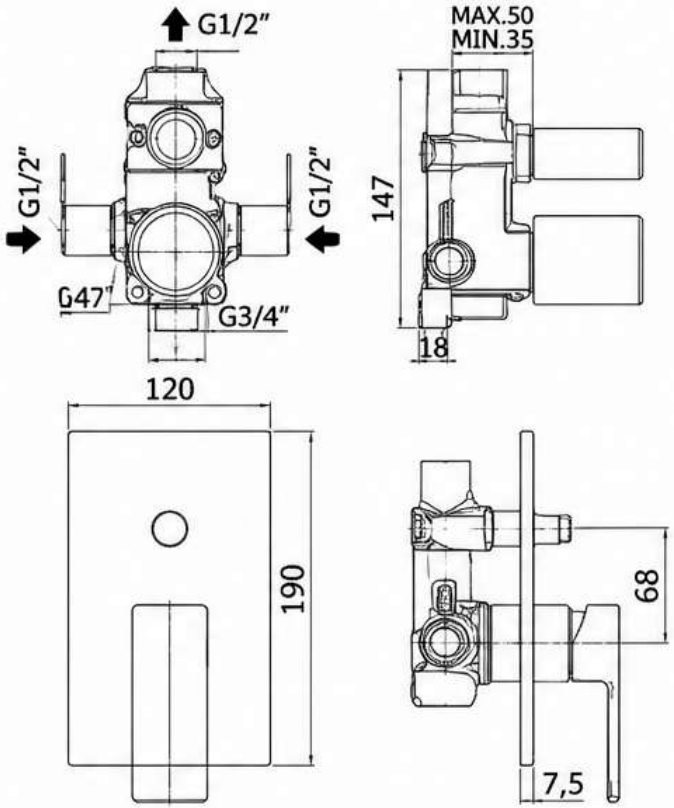
G1/2"
G1/2"
G1/2"
G47"
G3/4"
MAX.50
MIN.35
147
18
120
190
68
7,5