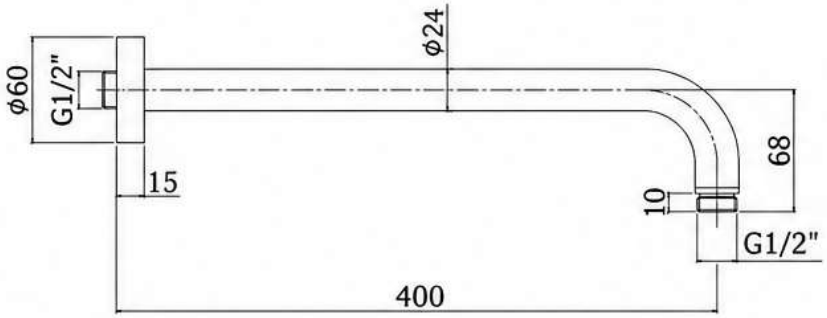
ϕ60
G1/2"
ϕ24
15
10
68
G1/2"
400

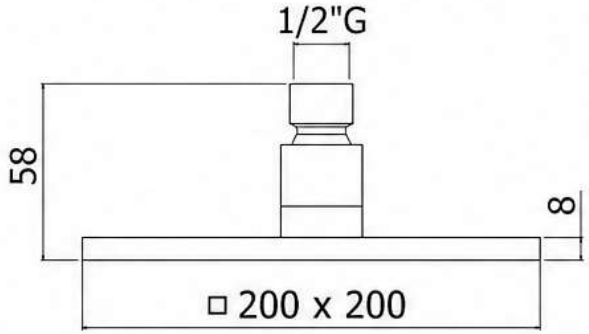
1/2"G
58
8
□ 200 x 200

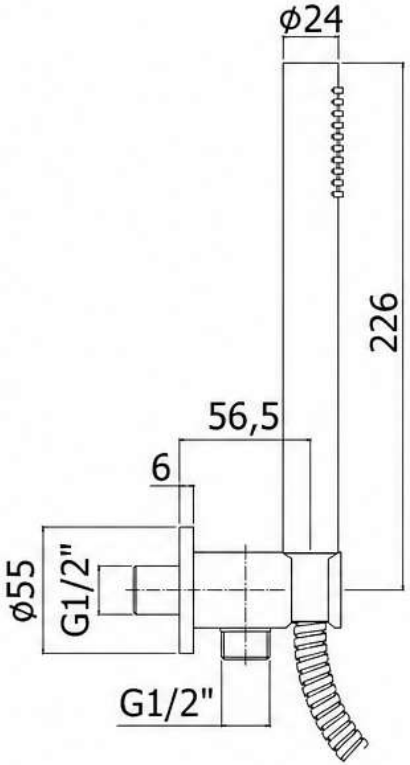
ϕ24
226
56,5
6
ϕ55
G1/2"
G1/2"