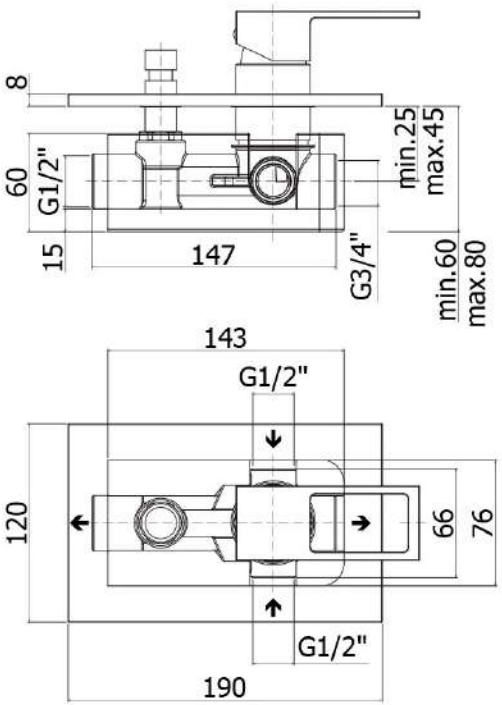
8
60
G1/2"
15
147
G3/4"
min.25
max.45
min.60
max.80
143
G1/2"
120
66
76
G1/2"
190

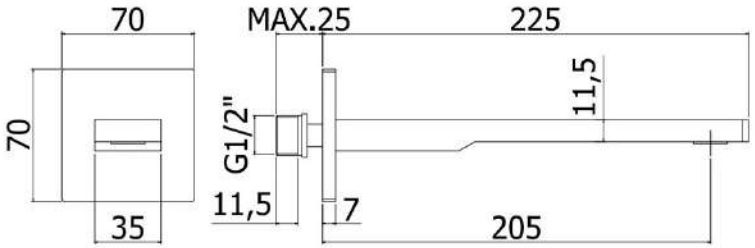
70
MAX.25
225
11,5
70
G1/2"
11,5
7
35
205

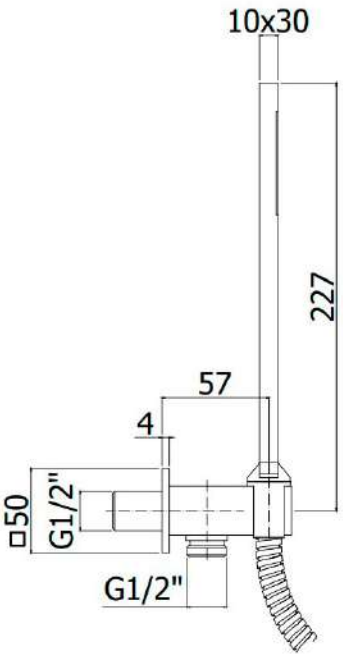
10x30
227
57
4
□50
G1/2"
G1/2"