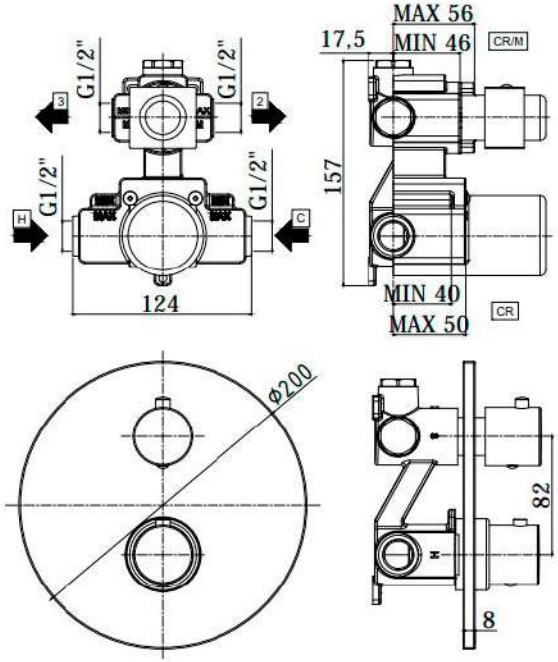
G1/2"
G1/2"
G1/2"
G1/2"
3
2
H
C
124
MAX 56
17,5
MIN 46
CR/M
157
MIN 40
MAX 50
CR
ø200
82
8

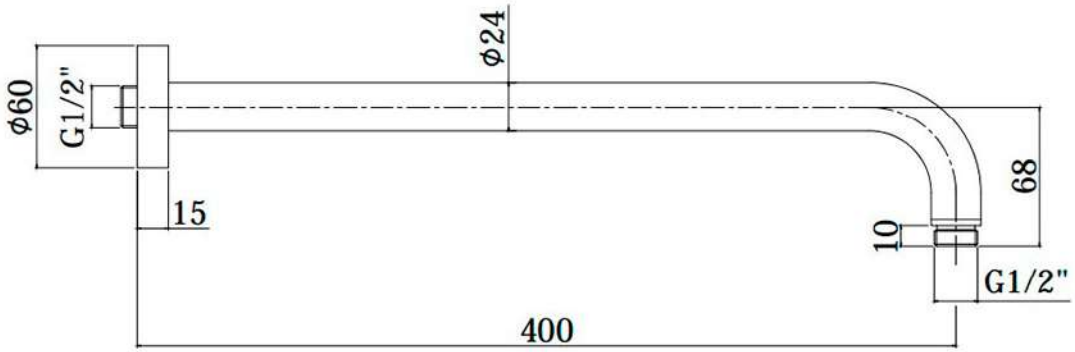
ø24
ø60
G1/2"
68
15
10
G1/2"
400

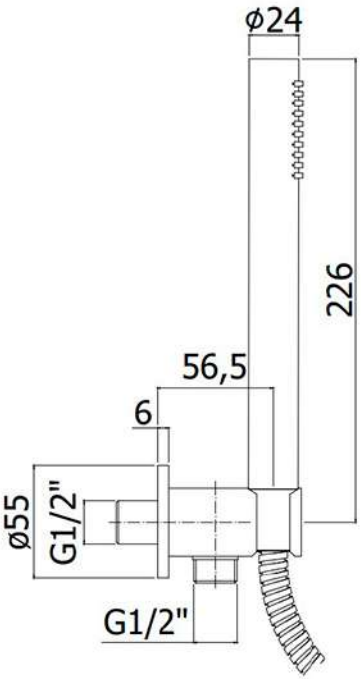
ø24
226
56,5
6
ø55
G1/2"
G1/2"

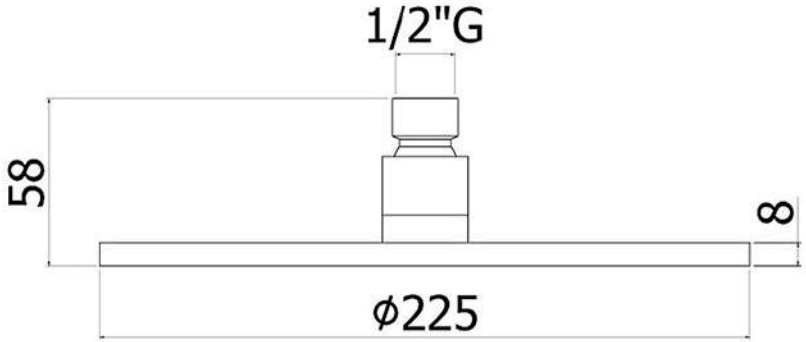
1/2"G
58
8
ø225