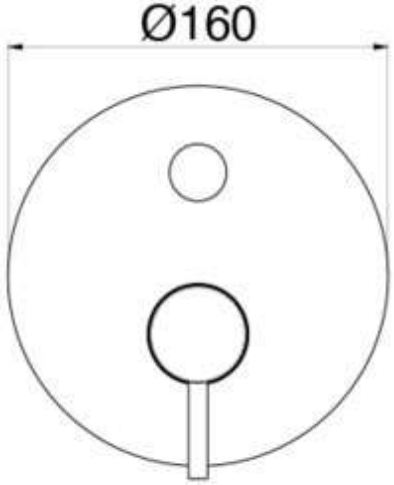
Ø160

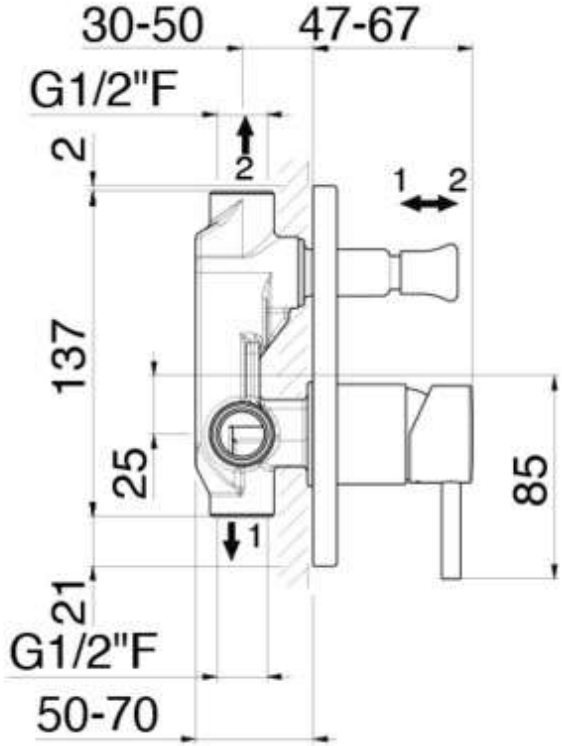
30-50
47-67
G1/2"F
2
2
1
2
137
25
85
1
21
G1/2"F
50-70

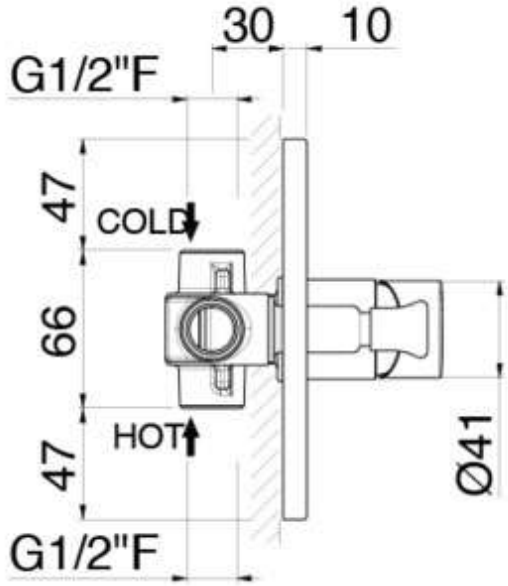
30
10
G1/2"F
47
COLD
66
HOT
47
Ø41
G1/2"F