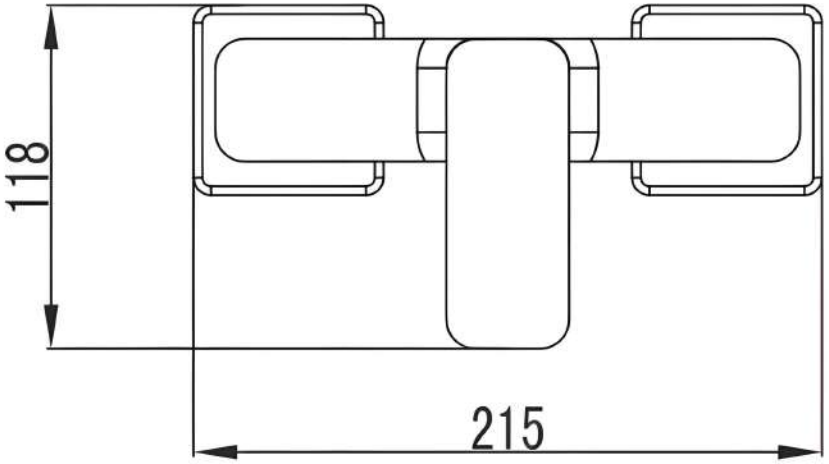
118
215

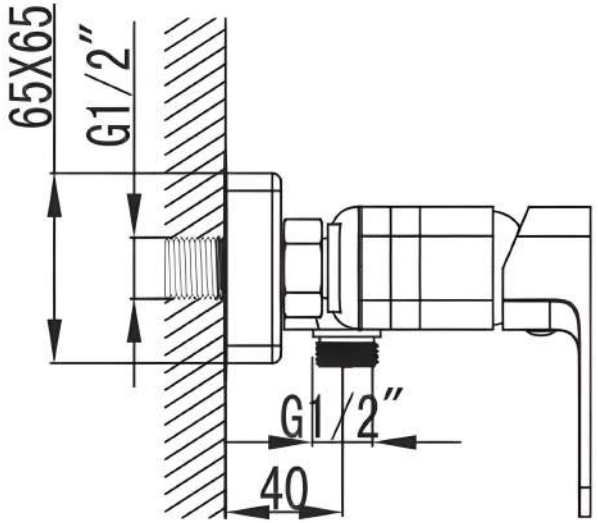
65X65
G1/2"
G1/2"
40

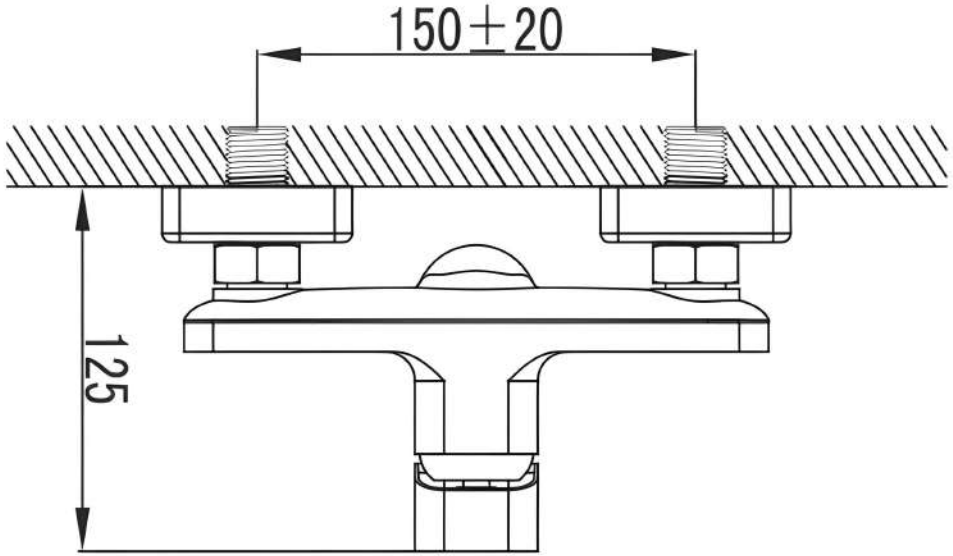
150±20
125