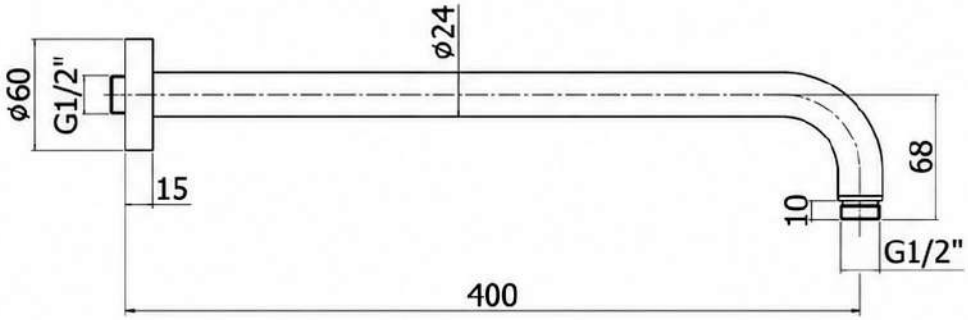
ø24
ø60
G1/2"
15
68
10
G1/2"
400

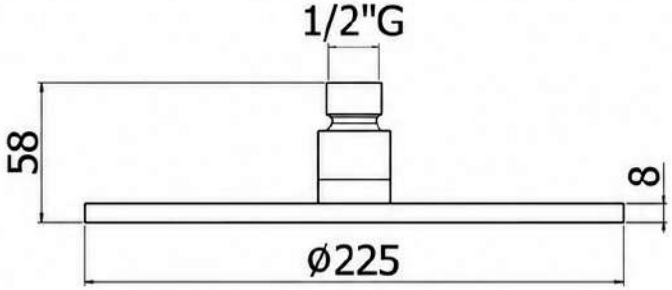
1/2"G
58
8
ø225

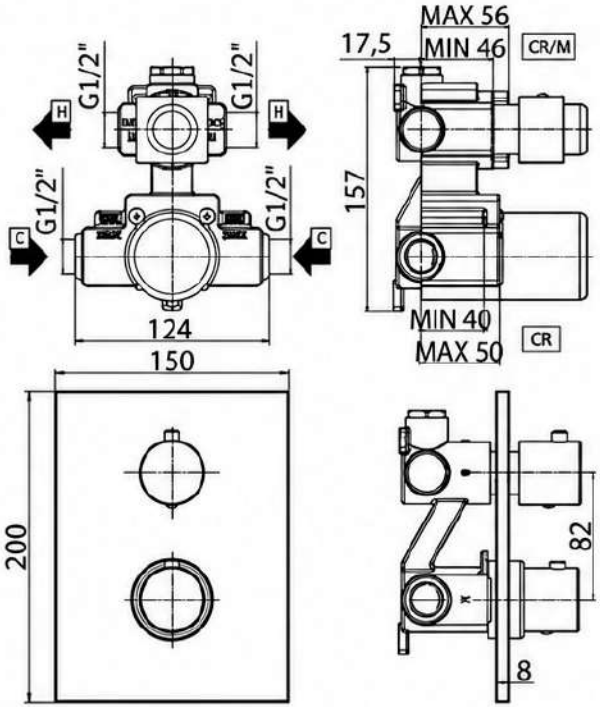
G1/2"
G1/2"
G1/2"
G1/2"
H
H
C
C
124
150
200
MAX 56
17,5
MIN 46
CR/M
157
MIN 40
MAX 50
CR
82
8

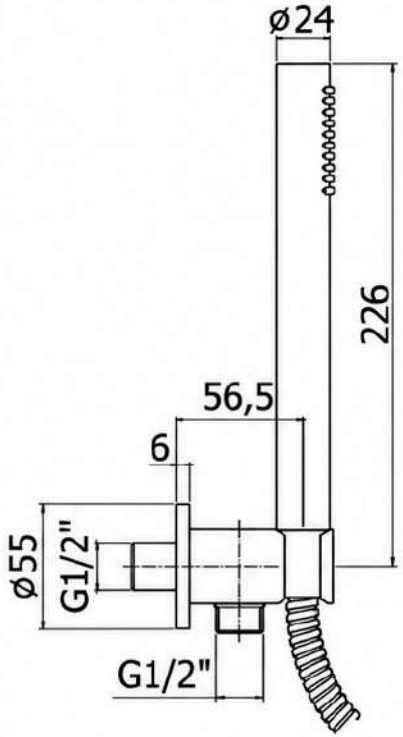
ø24
226
56,5
6
ø55
G1/2"
G1/2"